RNAV (GPS) RWY 11

BUCKLAND (BVK)(PABL)

WAAS CH 58041 W11A	APP CRS 111°	Rwy Ldg 3200 TDZE 29 Apt Elev 29

RNP APCH.

Baro-VNAV and VDP NA when using Selawik altimeter setting. For uncompensated Baro-VNAV systems, LNAV/VNAV NA below -21°C or above 54°C. When local altimeter setting is not received use Selawik altimeter setting: increase DA to 387 feet and all visibilities ⅜ SM; increase all MDAs 120 feet and visibility Cat C ¼ SM.

MISSED APPROACH: Climb to 3100 direct JAMUR and hold, continue climb-in-hold to 3100.

AWOS-3P	ANCHORAGE CENTER	KOTZEBUE RADIO	CTAF
135.15	119.2 263.0	122.3	122.9 L

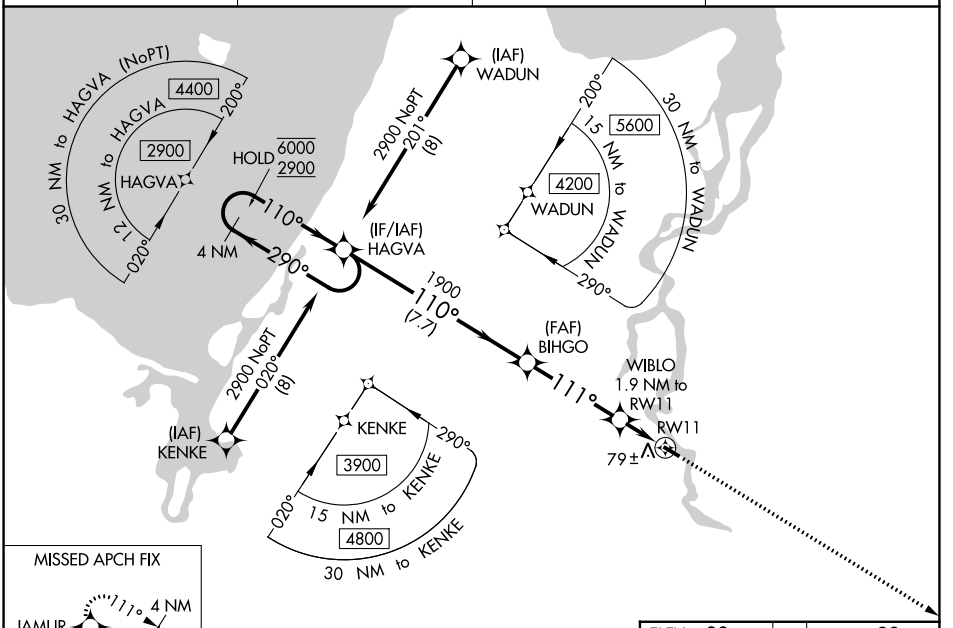

MISSED APCH FIX



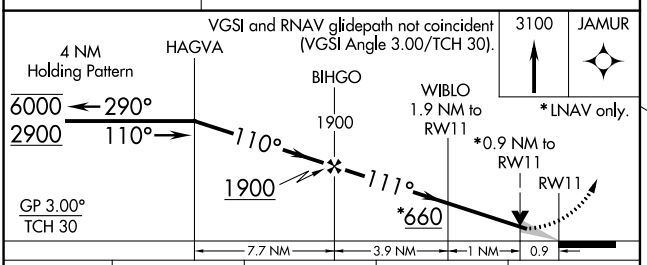

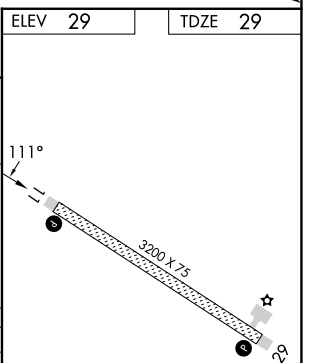

CATEGORY	A	B	C	D
LPV DA	279-1 250 (300-1)			NA
LNAV/VNAV DA	279-1 250 (300-1)			NA
LNAV MDA	340-1 311 (400-1)			NA
CIRCLING	540-1 511 (600-1)		640-1¾ 611 (700-1¾)	NA

AK, 29 OCT 2026 to 24 DEC 2026
AK, 29 OCT 2026 to 24 DEC 2026